CONNECTED WEAR

by fibretronic™

IP30

iPod Controller

Made for iPod

wearable technology

IP30 iPod Controller

CONNECTION INSTRUCTIONS

Connect any CONNECTED-wear Keypad or Joystick controller to the IP30 module using the Jack Plug. Connect the IP30 module to your iPod using the Dock Connector.

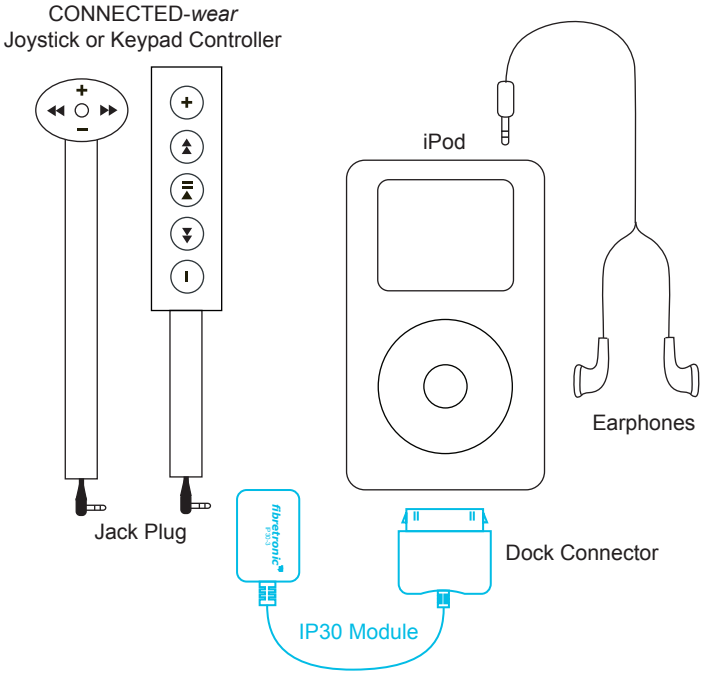

For further information, product support and warranty advice go to *www.connectedwear.com*

OPERATING INSTRUCTIONS

To operate the Keypad controller simply press the flexible buttons. To operate the Joystick controller toggle the flexible stick to the right, to the left, upwards or downwards. Push the Joystick in the centre for Play/Pause.

VOLUME +	Press to increase the volume.
FAST FORWARD	Press to skip forward to the next track. Press and hold to fast forward through a track.
PLAY / PAUSE	Press to start and stop the music. Press and hold to turn off the iPod.
REWIND	Press to skip backwards to the previous track. Press and hold to rewind through a track.
VOLUME –	Press to decrease the volume.

CARE INSTRUCTIONS

Please follow the garment manufacturer's care instructions listed on the apparel item. DO NOT WASH OR DRY CLEAN THE IP30 MODULE. Disconnect and remove the IP30 module from the garment before cleaning. After washing, ensure the Keypad and Joystick controllers are thoroughly dry before use.

Do Not Wash IP30 Module

CONNECTED WEAR

by fibretronic™

IP30

iPod Controller

This IP30 module allows you to control your iPod from your garment or bag. Plug the IP30 module into any product that has a CONNECTED-*wear* Keypad or Joystick controller.

iPod Compatibility

The IP30 module is compatible with all iPod players except; iPod 1st Generation, iPod 2nd Generation and iPod Shuffle. This is a 'Made for iPod' licensed product.

Made for iPod

CONNECTED-*wear*, by Fibretronic, is a unique system of integrated controls in garments, bags and other soft goods. CONNECTED-*wear* Keypad and Joysticks can control audio players, mobile phones and other personal electronics. Just select the CONNECTED-*wear* module of your choice and get CONNECTED....

www.connectedwear.com

iPod is a trademark of Apple Inc., registered in the U.S. and other countries

CONNECTED-*wear* and Fibretronic are trademarks of Fibretronic Limited